Document: **Data sheet**
Product: **SLV**
Size: **DN 80 -DN 600**
Issue: **6**
Issue date: **2009-12-22**

SLV

EN 1092 PN 10 • ANSI B16.5 Class 150 • AS 2129 Table D • AS 2129 Table E

Stafsjö's knife gate valve SLV is bi-directional and designed for the most demanding slurry and abrasive applications. It is a full bore valve with minimal seat cavity for maximum flow capacity.

SLV is a modular design consisting of a compact epoxy coated one or two piece valve body in nodular iron. SLV's unique seat construction guarantees excellent operation together with abrasive media. Stafsjö's unique box packing, TwinPack™, together with a bottom scraper gives tight sealing and assures extended operational reliability.

SLV's seats give it its unique abilities to perform for extended periods on the most difficult abrasive fluids; they are flexible in an axial way. When the valve is fully open the gate is completely clear of the seat/lining allowing it to form a continual liner from inlet to outlet protecting the internal parts from the fluid. When the valve closes the gate forces its way between the two seats. They are displaced axially forming a seal with the gate until it forms a complete closure of the flow port from both directions and isolating the body cavity from the fluid. The seats also form a sealing face on the valve flanges saving the need for gaskets while reinforcing rings are embedded in them to ensure position, shape and strength for long life.

Optional accessories for the SLV are bottom cover, locking pin and stem protection. When using bottom cover flushing of the bottom ports of the body through the existing parts is recommended. For security a locking pin can be mounted in open or closed position through the beams and the gate.

The SLV-valve is also available in ATEX-design (ATEX 94/9/EC II cat 3 G/D for zone 2 and 22). Please contact Stafsjö or your local representative for advice and information.

Stafsjö Valves AB. SE-618 95 Stavsjö, Sweden. Tel: +46 (0)11-39 31 00. Fax: +46 (0)11-39 30 67. info@stafsjo.se www.stafsjo.com
A Bröer Group company

Design data

Sizes	Flange drilling	Face-to-face dimension	Leakage rate
DN 80-DN 600	**ANSI B16.5 Class 150** **EN 1092 PN 10** **AS 2129 Table D** **AS 2129 Table E**	**Stafsjö manufacturing standard**	**EN 12266-1:2003 Rate A:** no visually detectable leakage is allowed for duration of the test **MSS SP-81**
Other sizes on request			

Pressure tests

Pressure tests are performed with water at 20° C according to EN 12266-1:2003.
Pressure for shell test: 1,5 times maximum allowable working pressure for open valve.
Pressure for seat tightness test: 1,1 times maximum allowable differential pressure for closed valve.

Maximum working pressure body at 20°C		Maximum differential pressure at 20°C		
DN	bar	DN	bar	
80-600	**10**	**80-400**	**10**	
		500-600*	**6**	***10 bar on request**

Basic equipment

A. Valve Body			
DN	Material	Type	Maximum temperature °C
80-300	**GG25**	**Cast iron**	**200**
350-600	**GGG50**	**Nodular iron**	**200**
Standard colour: epoxy colour, thickness 140-200µm, RAL 5015.			

B. Gate		
Material standard	Type	Surface treatment
Stainless steel	**1.4301/304/SS2333**	**Hard chromed**
Material options:		
Lean duplex stainless steel	**1.4162/S32101/LDX 2101**	**Hard chromed**
Stainless steel	**1.4401/316/SS2347**	**Hard chromed**
Duplex stainless steel	**1.4462/S32205/SS2377**	**Hard chromed**

C. Seats	
Material	Maximum temperature °C
EPDM	**120**

D. Box packing		
Material	pH	Maximum temperature °C
TwinPack™ (TY)	**2-13**	**260**

Actuators

Manual		Automatic	
Hand wheel[1)]	**(HW)**	**Pneumatic cylinder**	**(AC)**
Bevel gear[2)]	**(BG)**	**Electric motor[2)]**	**(EM)**
		Hydraulic cylinder[2)]	**(MH)**

[1)] Available with rising and non-rising stem. For recommended size, see page 5 column E
[2)] For recommended size, see separate data sheet

Recommended size for double acting pneumatic cylinder (AC)		
DN valve	Size AC	Maximum Force (kN)
80-150	**160**	**9.0**
200-250	**200**	**14.1**
300-400	**250**	**22.1**
500-600	**320**	**36.2**

The table above gives recommended cylinder sizes for normal operation with 5 bar air supply pressure. For other operating conditions, please contact Stafsjö or your local representative for advice.

The actuators are described in detail in separate data sheets. For actuators classified according to ATEX, please contact Stafsjö or your local representative.

Accessories

Knife gate valve		
Accessories	Model	Design
Mechanical limit switch	**Omron D4V**	**AC12 5A/250 V**
Inductive limit switch	**ifm electronic IG-2008-ABOA/IG0006**	**2-wire, 20-250 V AC/DC**
	ifm electronic IG-3008-BPKG/IG5401	**3-wire, 10-36 V DC PNP**
Purge ports	**Standard on all valve sizes**	**DN 100-DN 200: 1/2", DN 250-DN 400: 3/4",500-600 1"**
Locking pin	**For manually and automatic operated valves**	**See page 4**
Bottom cover	**Bottom cover with screws and gasket**	**See page 4**

Pneumatic cylinder		
Accessories	Model	Design
Solenoid valve	**Metal Work mono stable 5/2, series 70**	**1/4"**
	Metal Work mono stable 5/2, series 70	**1/2"**
Magnetic limit switch	**Elobau 102247 & 10224709**	**2-wire, 20-250 V AC/DC**
	Elobau 102290PE & 102290PE09	**3-wire, 10-36 V DC PNP**
Bellow	**For manually and automatic operated valves**	**See page 4**

The accessories are described in detail in separate data sheets. For accessories classified according to ATEX, please contact Stafsjö or your local representative.

Part list

Pos.	Part	Material (Name)
1	Hand wheel	Epoxy coated Ø 315 Cast iron (GG25) ≥ Ø 400 Cast iron (GG20)
2	Yoke	Steel (1.0038/SS1312), epoxy coated
2a	Bearing	Brass (CuZn39Pb3/SS5170)
2b	Slide washer	POM
2c	Bearing	Brass (CuZn39Pb3/SS5170)
3	Stem	Stainless steel (1.4305/SS2346)
3a	Stop washer	Stainless steel (1.4301/SS2333)
3b	Screw	Stainless steel (A2)
3c	Washer	Stainless steel (A2)
4	Stem nut	Brass (CW603N)
4a	Washer	Stainless steel (A2)
4b	Screw	Stainless steel (A2)
4c	Distance plate	Stainless steel (1.4301/SS2333)
5	Tie rod	Stainless steel (1.4301/SS2333)
5a	Washer	Stainless steel (A2)
5b	Nut	Stainless steel (A2)
6	Gate	See equipment B
7	Beam	Aluminium (EN AW-6063-T6)
8	Gland	Nodular cast iron (GGG50), epoxy coated
8a	Stud bolt	Stainless steel (A2), zinc coated
8b	Washer	Stainless steel (A2)
8c	Nut	Stainless steel (A2), zinc coated
9[2)]	Box packing	See equipment D
9a[2)]	Box bottom scraper	UHMW-PE
10	Valve body	See equipment A
13	Seat[2)]	See equipment C
16	Gate guard, not for HW	Stainless steel (1.0038/SS1312)
17	Gate clevis	Stainless steel (1.4305/SS2346)
18	Cylinder	See data sheet
20	Clevis pin	Stainless steel (1.4305/SS2346)
21	Split pin	Stainless steel (1.4436/SS2343)
25	Piston rod	Stainless steel (1.4305/SS2346)
28	Locking nut	Stainless steel (1.4305/SS2346)
47[1)]	Gasket	Dixo 4000
54[1)]	Bottom cover	Nodular iron GGG50, epoxy coated
54a[1)]	Screw	Stainless steel (A2)
54b[1)]	Washer	Stainless steel (A2)

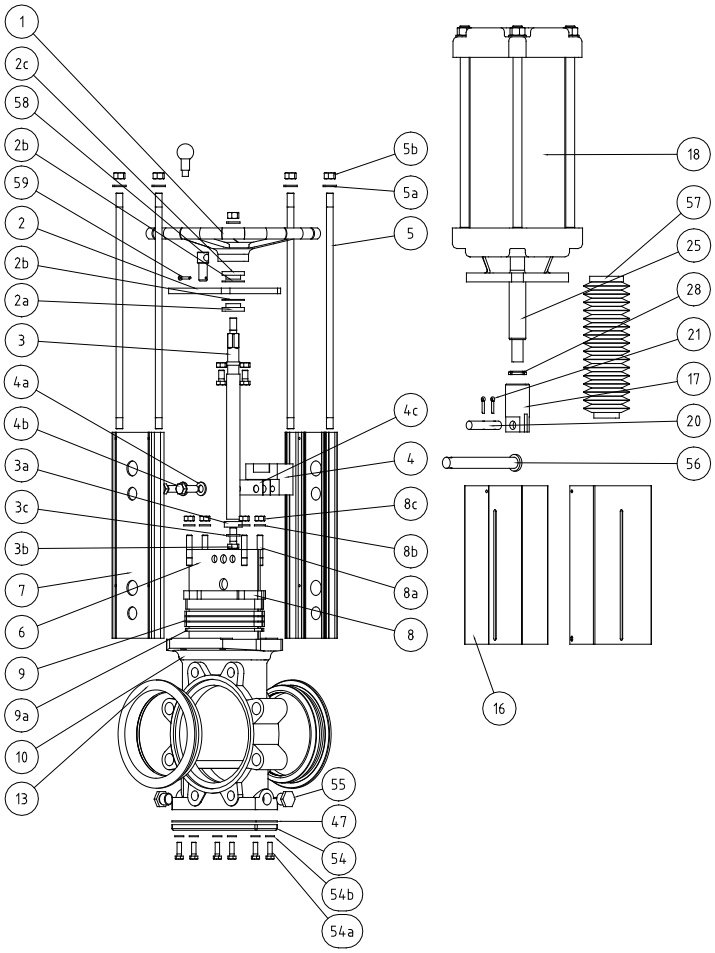

55	Plug	Steel, zinc coated
56[1)]	Locking pin	Stainless steel (1.4301/SS2333)
57[1)]	Bellow	Rubber
58[1)]	Locking pin for HW	Stainless steel (1.4436/SS2343)
59[1)]	Split pin	Stainless steel (1.4436/SS2343)

[1)] *Optional accessories*
[2)] *Recommended spare parts*

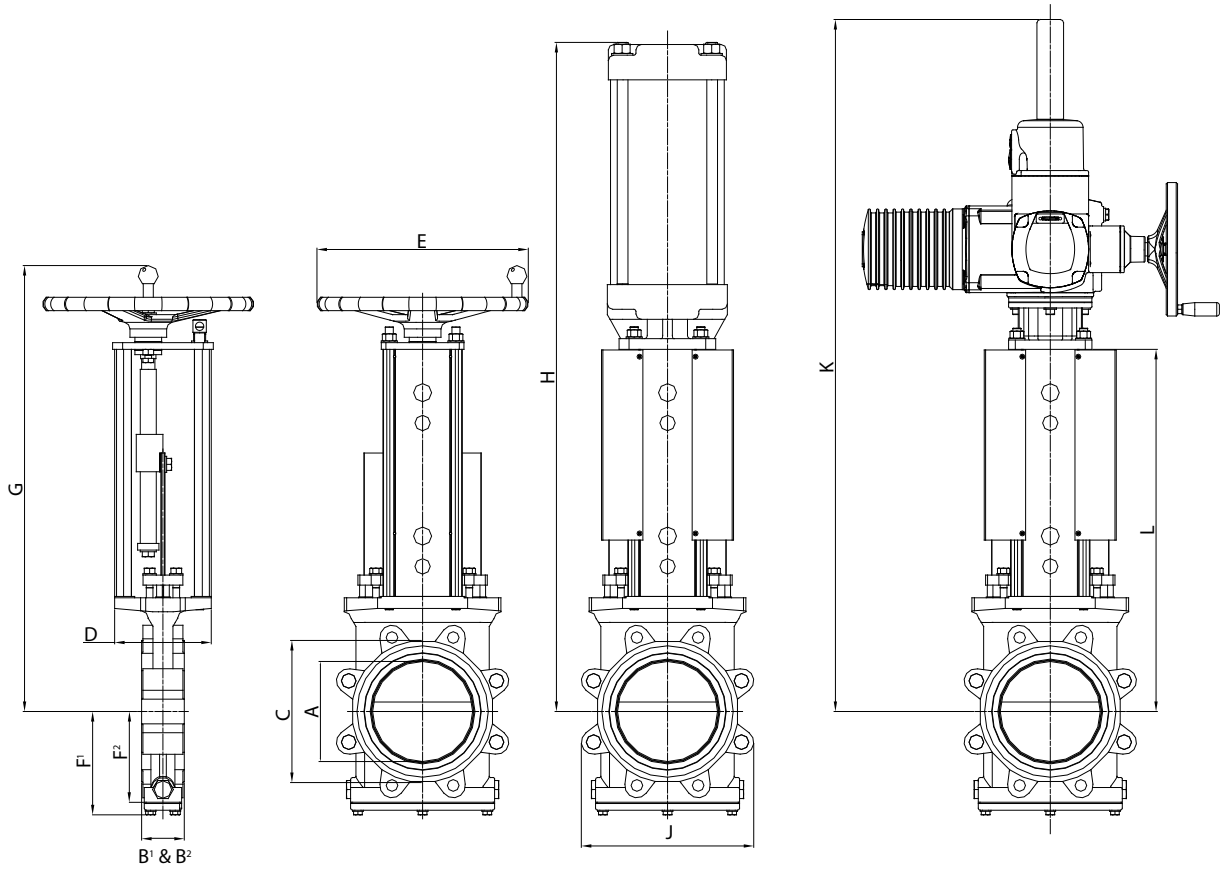

Main dimensions

Dimensions (mm)													
Size	A	B¹	B²	C	D	E	F¹	F²	G	H	J	K	L
80	**80**	**59**	**57**	**126**	**80**	**315**	**114**	**94**	**575**	**749**	**180**	**801**	**419**
100	**100**	**59**	**57**	**158**	**80**	**315**	**123**	**103**	**611**	**809**	**206**	**836**	**454**
150	**150**	**66**	**64**	**213**	**145**	**315**	**156**	**136**	**686**	**948**	**259**	**981**	**543**
200	**200**	**78**	**76**	**269**	**145**	**315**	**189**	**169**	**801**	**1147**	**312**	**1079**	**641**
250	**250**	**78**	**76**	**322**	**145**	**400**	**224**	**204**	**883**	**1279**	**388**	**1261**	**723**
300	**300**	**84**	**82**	**372**	**175**	**520**	**259**	**236**	**965**	**1609**	**457**	**1409**	**861**
350	**350**	**84**	**82**	**432**	**200**	**520**	**289**	**266**	**1048**	**1742**	**516**	**1597**	**944**
400	**400**	**97**	**95**	**483**	**200**	**635**	**323**	**300**	**1154**	**1879**	**575**	**1734**	**1031**
500	**500**	**123**	**121**	**589**	**300**	**-**	**388**	**364**	**-**	**2233**	**680**	**2136**	**1223**
600	**600**	**123**	**121**	**690**	**300**	**-**	**449**	**425**	**-**	**2538**	**816**	**2426**	**1413**

B¹ minimum required for installation
B² installed face-to-face
F¹ Valve equipped with bottom cover, gasket and screws
F² Valve without bottom
Main dimensions are only for information. Contact Stafsjö for certified drawings.

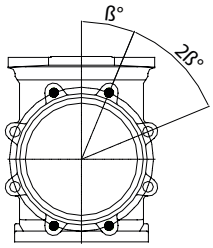

DN 80-DN 200

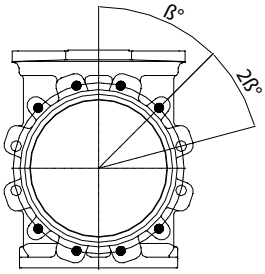

DN 250-DN 300

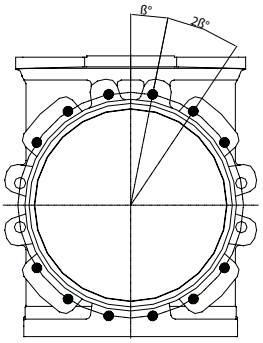

DN 350- 400

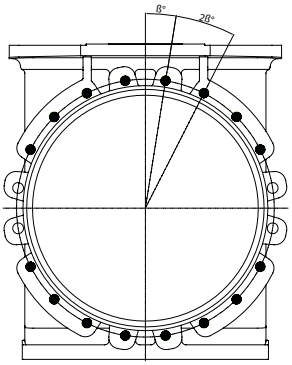

DN 500-DN600

Flange drilling

EN 1092 PN 10 (mm)										
DN	80	100	150	200	250	300	350	400	500	600
Outside flange diameter	**200**	**220**	**285**	**340**	**395**	**445**	**505**	**565**	**670**	**780**
Bolt circle diameter	**160**	**180**	**240**	**295**	**350**	**400**	**460**	**515**	**620**	**725**
Number of throughgoing holes (○)	**4**	**4**	**4**	**4**	**4**	**4**	**4**	**4**	**4**	**4**
Number of tapped holes, side (●)	**4**	**4**	**4**	**4**	**8**	**8**	**12**	**12**	**16**	**16**
Bolt size	**M16**	**M16**	**M20**	**M20**	**M20**	**M20**	**M20**	**M24**	**M24**	**M27**
Size of throughgoing holes	**Ø18**	**Ø18**	**Ø22**	**Ø22**	**Ø22**	**Ø22**	**Ø22**	**Ø26**	**Ø26**	**Ø30**
β°	**22,5**	**22,5**	**22,5**	**22,5**	**15**	**15**	**11,25**	**11,25**	**9**	**9**
Depth of tapped holes[1)]	**14**	**14**	**16**	**20**	**19**	**22**	**21**	**25**	**34**	**32**

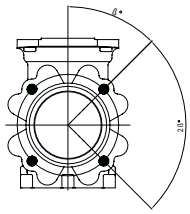

DN 80

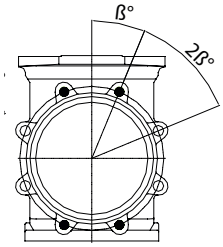

DN 100-DN 200

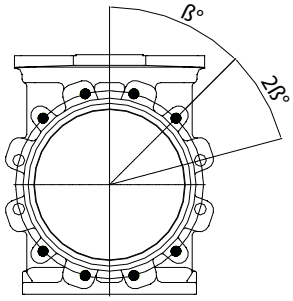

DN 250-DN 350

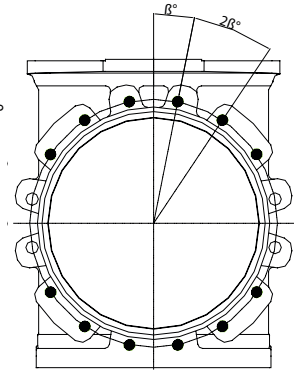

DN 400

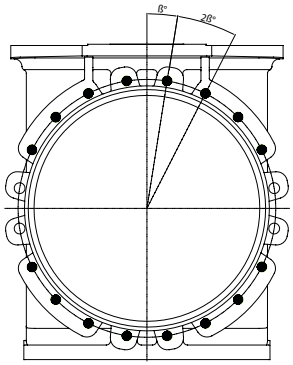

DN 500-DN 600

Flange drilling

ANSI B16.5 Class 150 (mm)										
DN	80	100	150	200	250	300	350	400	500	600
Outside flange diameter	**190,5**	**228,6**	**297,4**	**342,9**	**406,4**	**482,6**	**533,4**	**596,9**	**698,5**	**812.8**
Bolt circle diameter	**152,4**	**190,5**	**241,3**	**298,5**	**362**	**431,8**	**476,3**	**539,8**	**635**	**749,3**
Number of throughgoing holes (○)	**-**	**4**	**4**	**4**	**4**	**4**	**4**	**4**	**4**	**4**
Number of tapped holes, side (●)	**4**	**4**	**4**	**4**	**8**	**8**	**8**	**12**	**16**	**16**
Bolt size (UNC)	**5/8-11**	**5/8-11**	**3/4-10**	**3/4-10**	**7/8-9**	**7/8-9**	**1-8**	**1-8**	**11/8-7**	**11/4-7**
Size of throughgoing holes	**-**	**Ø18**	**Ø22**	**Ø22**	**Ø26**	**Ø26**	**Ø30**	**Ø30**	**Ø33**	**Ø36**
β°	**45**	**22,5**	**22,5**	**22,5**	**15**	**15**	**15**	**11,25**	**9**	**9**
Deapth of tapped holes[1)]	**14**	**14**	**16**	**20**	**19**	**22**	**21**	**25**	**34**	**32**

Throughgoing holes ○
Tapped holes ●

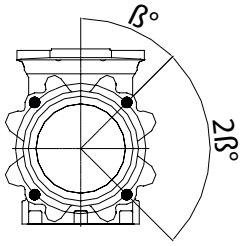

DN 80-DN 100

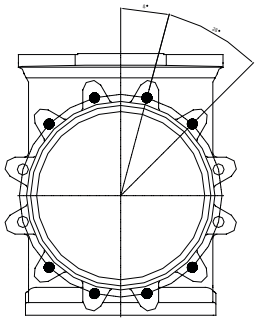

DN 150-DN 250

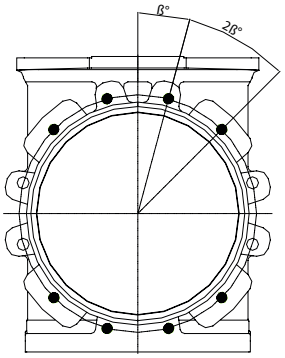

DN 300-DN 400

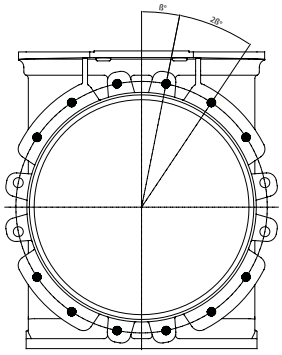

DN 500-DN600

Flange drilling

AS 2129 Table D (mm)										
Size	80	100	150	200	250	300	350	400	500	600
Outside flange diameter	**185**	**215**	**280**	**335**	**405**	**455**	**525**	**580**	**705**	**825**
Bolt cirlce diameter	**146**	**178**	**235**	**292**	**356**	**406**	**470**	**521**	**641**	**756**
Number of throughgoing holes (○)	**-**	**-**	**4**	**4**	**4**	**4**	**4**	**4**	**4**	**4**
Number of tapped holes, side (●)	**4**	**4**	**4**	**4**	**4**	**8**	**8**	**8**	**12**	**12**
Bolt size	**M16**	**M16**	**M16**	**M16**	**M20**	**M20**	**M24**	**M24**	**M24**	**M27**
Size of throughgoing holes	**-**	**Ø18**	**Ø18**	**Ø18**	**Ø22**	**Ø22**	**Ø26**	**Ø26**	**Ø26**	**Ø30**
β°	**45**	**45**	**22.5**	**22.5**	**22.5**	**15**	**15**	**15**	**11,25**	**11,25**
Depth of tapped holes[1)]	**14**	**14**	**16**	**20**	**19**	**22**	**21**	**25**	**34**	**32**

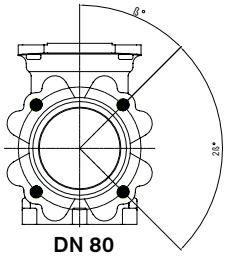

DN 80

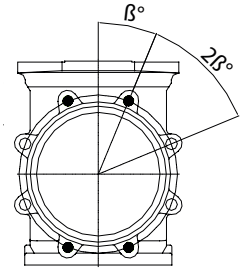

DN 100-DN 200

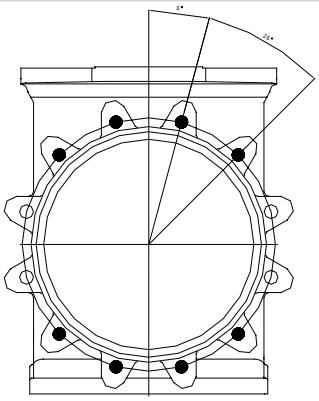

DN 250-DN 400

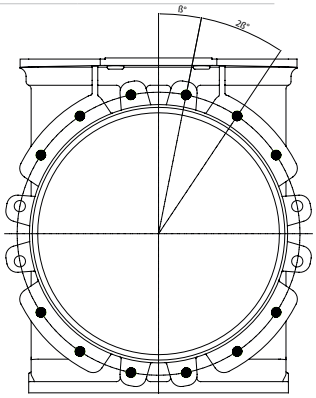

DN 500-DN 600

Flange drilling

AS 2129 Table E (mm)										
DN	80	100	150	200	250	300	350	400	500	600
Outside flange diameter	**185**	**215**	**280**	**335**	**405**	**455**	**525**	**580**	**705**	**825**
Bolt circle diameter	**146**	**178**	**235**	**292**	**356**	**406**	**470**	**521**	**641**	**756**
Number of throughgoing holes (○)	**-**	**4**	**4**	**4**	**4**	**4**	**4**	**4**	**4**	**4**
Number of tapped holes, side(●)	**4**	**4**	**4**	**4**	**8**	**8**	**8**	**8**	**12**	**12**
Bolt size	**M16**	**M16**	**M20**	**M20**	**M20**	**M24**	**M24**	**M24**	**M24**	**M30**
Size of throughgoing holes	**-**	**Ø18**	**Ø22**	**Ø22**	**Ø22**	**Ø26**	**Ø26**	**Ø26**	**Ø26**	**Ø33**
β°	**45**	**22,5**	**22,5**	**22,5**	**15**	**15**	**15**	**15**	**11,25**	**11,25**
Depth of tapped holes[1)]	**14**	**14**	**16**	**20**	**19**	**22**	**21**	**25**	**34**	**32**

Throughgoing holes ○
Tapped holes ●